SPEC SHEET - ORDER GUIDE
ALU-2215 SURFACE

c UL us LISTED E366167

PART NUMBER BUILDER:

Category	Material	Ext Dim	Type	Ext Finish	Lens Finsh	Length
CHN	ALU	2215	SUR	SL	CLR	2M (6.56') (78.74")
				BK	FRS	
				WT[2]	50FR[1]	

Notes:
1. Configurations have a lead-time of 7-9 weeks
2. Configurations have a lead-time of 2-3 weeks
3. Lenses are suitable for outdoor use with respect to exposure to ultraviolet light and water exposure in accordance with UL 746C.
4. Every 2M of channel comes with 2M of lens, 2 mounting clips, and 2 end caps of choice.

CHANNEL DIMENSIONS

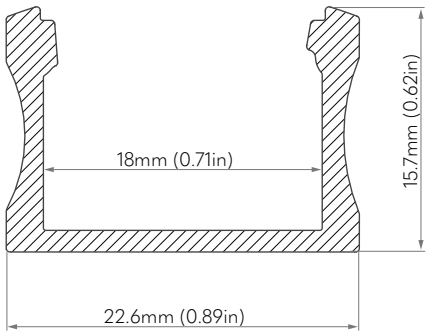

MOUNTING OPTIONS

Mount with Clips

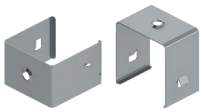

Part Number	Ext Finish	
CHN-CLP-2215-SUR	SL	Silver
	BK	Black
	WT[1]	White

ACCESSORIES

End Caps

Every 2M of channel comes with 2 end caps of choice.

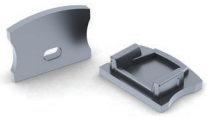

Category	End Cap		Channel	Type	Ext Finish
CHN	ECT	No Hole	2215	SUR	SL
	ECH	Standard Hole			BK
					WT[1]

EXTERIOR FINISH

SL	Silver
BK	Black
WT[2]	White

LENS FINISH

CLR	Clear Lens
FRS	Frosted Lens
50FR[1]	50% Frosted

Nova Flex LED, LLC. retains the right to modify the design of our products at any time as part of the company's continual product improvement program.

PROJECT	FIXTURE	PHASE	DATE